AC VOLTAGE TRANSDUCERS

FPVX

Applied Standards & Rules

Measuring and conversion	IEC 688 / 1992 - 04
Dielectrical strength	IEC 688 2KVac / 1 min.
Surge and Impulse test	ANSI C37.90 / 1989
	IEC 255-3 (1989) 4KV 1.2 x 50 us

Order form

FPVX — ■ — ■ — ■ 3 unit of avg. to rms conversion

Vn **Pn** **On**

Input & Output parameters

Vn : Voltage input	**Vn** rating range	**V1** 150 V 0 - 150 V	**V2** 300 V 0 - 300 V	**V3** 600 V 0 - 600 V	**Vy** Specified	**On** : Output		
						O1 0 - 1 mA	**O2** 0 - 20 mA	**O3** 4 - 20 mA
						O4 0 - 1 V	**O5** 0 - 5 V	**O6** 0 - 10 V
Pn : Auxiliary power	**Pn** rating range	**P1** AC120 V 120 V ± 15%	**P2** AC240 V 240 V ± 15%	**Ps** Internal Power	**Py** Specified	**O7** 2 - 10 V	**Oy** Specified	

Py : DC24 / 48 / 125 V ± 20% or other range under specified

Note

1. External power mode suitably for all output types
   Internal power mode, only suitably for 0-1mA / 0-20mA / 0-1V / 0-5V / 0-10V output

Suzhou Surpon Instrument Co.,LTD
Building B,AscendasiHub,No.5 Xinghan Road,SIP.Suzhou
Tel: +86-512-68381801 E-mail:surpon@163.com
Fax: +86-512-68381803 http://www.surpon.com

Specification

Accuracy (23±3°C)	0.2% RO
Maximum output load	DC current mode : maximum 10V drop DC voltage mode : maximum 5mA drive
Dielectric strength	AC 2KV 1 minute between terminals; AC 2.6KV 1 minute / terminals to case
Surge and impulse test	ANSI C37.90 / 1989, IEC 255-3 (1989) 4 KV 1.2 x 50 us
Maximum input over	1.5 x rated / continuous 2 x rated / 10 seconds
Input burden	voltage less 0.1 VA
Response time & ripple	≦ 400 ms for step change 0-99% ripple less 0.5% ro peak to peak
Frequency	45 ~ 400 Hz
Stability	Temperature range (20 to 30°C) long term stability / year Maximum 60 ppm / °C less 0.2% draft / year typically
Storage condition	Temperature range -25 to 70°C, RH 20 to 95% non condensed
Operating condition	Temperature range -20 to 65°C, RH 0 to 99% non condensed
Magnetic field effect	< 0.01% under 100 ampere turns at 1M center
Power dissipation	Maximum 8 VA

Terminal Connection

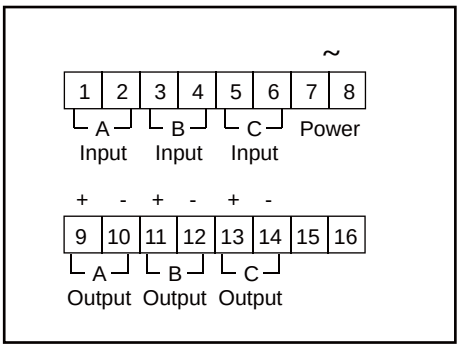

DC power option for terminal 7(+), 8(-)

Dimension

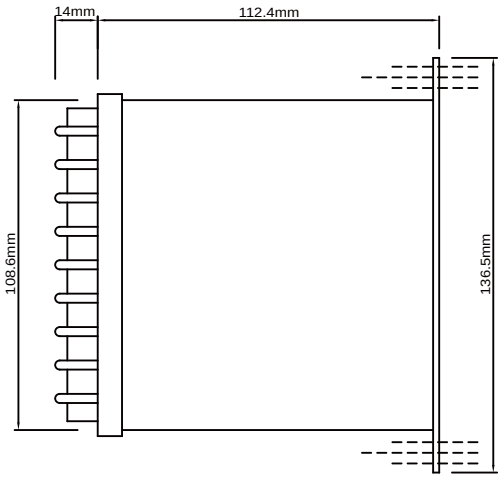

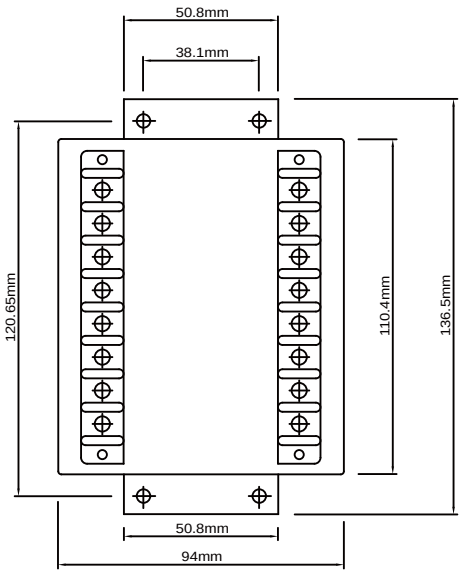

Suzhou Surpon Instrument Co.,LTD
Building B,AscendasiHub,No.5 Xinghan Road,SIP.Suzhou
Tel: +86-512-68381801 E-mail:surpon@163.com
Fax: +86-512-68381803 http://www.surpon.com